

WST16L

Elektrische stapelaars

Capaciteit: 1600 kg | Accu: 24V / 150Ah

LI-ION

Tramag B.V.
Harsweg 21
2461 EZ Ter Aar

www.tramag.nl
+31 (0)172 42 42 20
info@tramag.nl

tramag
intern transport

Bouwtekening
WST16L

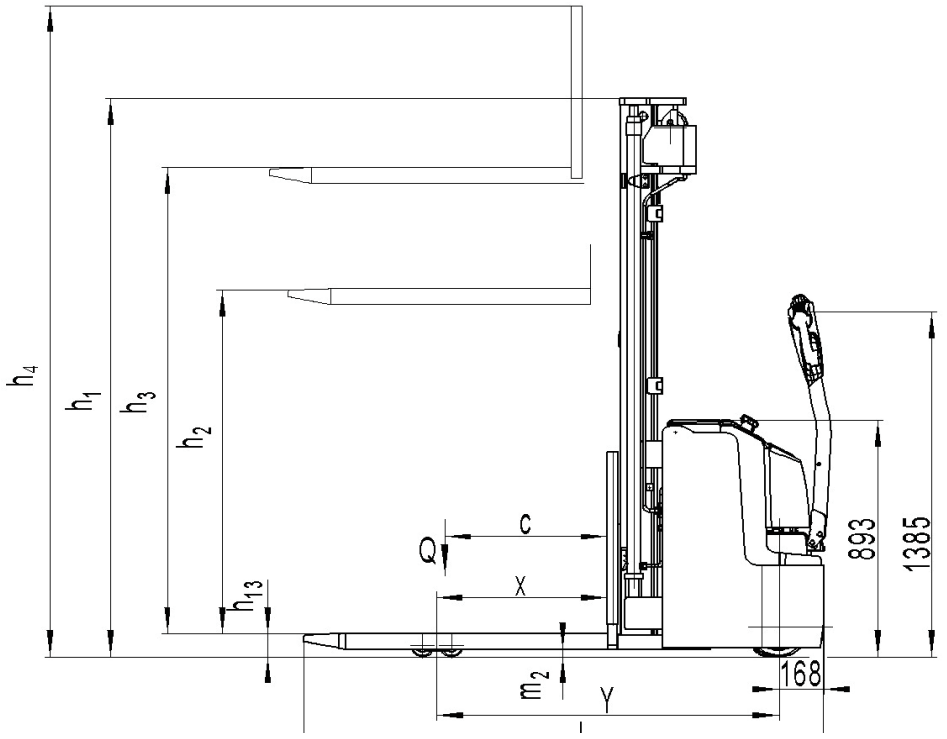

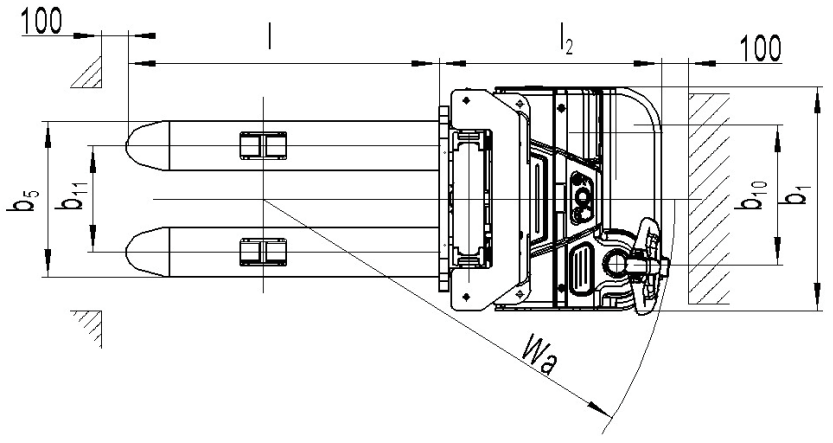

Designation	Lowered mast height h1(mm)	Free lift height h2(mm)	Lift height h3(mm)	Extended mast height h4 (mm)	Lift+fork height h3+h13(mm)
Two-stage mast	1985	—	2830	3380	2920
	2108	—	3130	3680	3220
	2308	—	3530	4080	3620
Two-stage mast FFL (Full-Free-Lift)	1958	1410	2830	3380	2920
	2108	1560	3130	3680	3220
	2308	1760	3530	4080	3620
Three-stage mast	2008	—	4230	4780	4320
	2108	—	4530	5080	4620
Three-stage mast FFL (Full-Free-FFL)	1708	1120	3330	3880	3420
	1908	1320	3930	4480	4020
	2008	1420	4230	4780	4320
	2108	1520	4530	5080	4620
	2343	1756	5230	5780	5320
	2408	1820	5430	5980	5520

Specificaties
WST16L

Type sheet for industrial truck acc. to VDI 2198

Distinguishing mark	1.2	Manufacturer`s type designation		WST16L (4600)
	1.3	Power (battery ,diesel, petrol, gas, manual)		Battery
	1.4	Operator type		Pedestrian
	1.5	Load Capacity / rated load	Q (t)	1.6
	1.6	Load centre distance	c (mm)	600
	1.8	Load distance ,centre of drive axle to fork	x (mm)	647
	1.9	Wheelbase	y (mm)	1293
Weight	2.1	Service weight	kg	1340
	2.2	Axle loading, laden front/rear	kg	930/2010
	2.3	Axle loading, unladen front/rear	kg	850/490
Tires, chassis	3.1	Tires		Polyurethane(PU)
	3.2	Tire size,front	Φxw (mm)	Φ230×70
	3.3	Tire size,rear	Φxw (mm)	Φ84×70
	3.4	Additional wheels(dimensions)	Φxw (mm)	Φ150x54
	3.5	Wheels,number front/rear(x=driven wheels)		1x +1/4
	3.6	Tread, front	b_{10} (mm)	522
	3.7	Tread, rear	b_{11} (mm)	390/505
Dimensions	4.2	Lowered mast height	h_1 (mm)	2108
	4.3	Free Lift height	h_2 (mm)	1520
	4.4	Lift height	h_3 (mm)	4530
	4.5	Extended maximal height	h_4 (mm)	5088
	4.9	Height of tiller in drive position min./ max.	h_{14} (mm)	850/1385
	4.15	Height, lowered	h_{13} (mm)	90
	4.19	Overall length	l_1 (mm)	1964
	4.20	Length to face of forks	l_2 (mm)	814
	4.21	Overall width	b_1 (mm)	820
	4.22	Fork dimensions	s/e/l (mm)	60/180/1150
	4.25	Distance between fork-arms	b_5 (mm)	570/685
	4.32	Ground clearance, centre of wheelbase	m_2 (mm)	28
	4.33	Aisle width for pallets 1000X1200 crossways	Ast (mm)	2406
	4.34	Aisle width for pallets 800X1200 lengthways	Ast (mm)	2393
	4.35	Turning radius	Wa (mm)	1510
Performance data	5.1	Travel speed, laden/ unladen	km/h	5.7/6.0
	5.2	Lift speed, laden/ unladen	m/s	0.13/0.20
	5.3	Lowering speed, laden/ unladen	m/s	0.28/0.23
	5.8	Max. gradeability, laden/ unladen	%	6/12
	5.10	Service brake		Electromagnetic
Electric- engine	6.1	Drive motor rating S2 60min	kW	1.3
	6.2	Lift motor rating at S3 4.5%	kW	3.2
	6.3	Battery acc. to DIN 43531/35/36 A, B, C, no		3VBS
	6.4	Battery voltage, nominal capacity K5	V / Ah	24/150
	6.5	Battery weight +/-5%	kg	230
	6.6	Energy consumption acc: to VDI cycle	kWh/h	1.59
Additional data	8.1	Type of drive control		AC-Speed Control
	8.4	Sound level at driver`s ear acc. to EN 12053	dB(A)	<70

tramag
intern transport



Tramag B.V.
Harsweg 21
2461 EZ Ter Aar

www.tramag.nl
+31 (0)172 42 42 20
info@tramag.nl

Zet- en drukfouten voorbehouden.